HD-QSFP+/40G-LR4

1 Features

Duplex LC connector
Hot-pluggable QSFP+ form factor
Operating data rate up to11.3Gbps per Lane
Up to 10km transmission
Maximum 3.5W operation power
Compliant with IEEE 802.3ba
Compliant with SFF 8436
Digital Diagnostic Monitoring (DDM)
Complies with RoHS directive (2002/95/EC)

2 Applications

40GBASE-LR4 40G Ethernet

3 General

This product is a high performance 40Gbps transceiver module designed for optical communication applications. It converts 4 channels of 10Gb/s electrical input data to 4 CWDM optical signals, and multiplexes them into a single channel for 40Gb/s optical transmission. On the receiver side, the module optically de-multiplexes a 40Gb/s input into 4 CWDM channels signals, and converts them to 4 channel output electrical data.

4 Performance Specifications

Absolute Maximum Ratings

Parameter	Symbol	Min.	Max.	Unit
Storage Temperature	T_{st}	-40	+85	°C
Operating relative humidity (Non- condensing)	RH	5	90	%
Input Voltage	-	GND	V_{cc}	V
Power Supply Voltage	V_{cc}	0	3.6	V

Recommended Operating Environment

Parameter	Symbol	Min.	Typ.	Max.	Unit
Power Supply Voltage	V_{cc}	+3.14	+3.3	+3.46	V
Power Supply Current	I_{cc}	-	-	1130	mA
Data rate per lane		-	10.3125	11.3	Gbps
Operating relative humidity (Non- condensing)	RH	5		85	%
Case Temperature (Operating)	T_C	0	-	70	°C
		-40		85	°C
I2C clock frequency	-	-	100	400	KHz
Power consumption Max	-	-	-	3.5	W

深圳市华瀚达光电科技有限公司
Shenzhen Handar Optical Technology Co.,Ltd
www.huahanda.com

Transmitter Characteristics

Parameter	Symbol	Min.	Typ.	Max.	Unit	Note
Signal Speed per lane	Sp		10.3125		Gbps	
Center Wavelength	λ	1264.5	1271	1277.5	nm	Lane0
		1284.5	1291	1297.5	nm	Lane1
		1304.5	1311	1317.5	nm	Lane2
		1324.5	1331	1337.5	nm	Lane3
Spectral Width (-20dB)	Δλ	-	-	1	nm	
Side Mode Suppression Ratio	SMSR	30	-	-	dB	
Total Output Optical Power	Pot			8.3	dBm	
Average Optical Output Power	Po	-7	-	2.3	dBm	
Optical Modulation Amplitude, Each Lane	OMA	-4		3.5	dBm	
Extinction Ratio	Er	3.5	-	-	dB	
Differential Input Impedance	-	80	100	120	Ω	
Differential Data Input Swing	V_{INPP}	120		1000	mV	

Receiver Characteristics

Parameter	Symbol	Min.	Typ.	Max.	Units	Notes
Wavelength of Operation	λ	1264.5	1271	1277.5	nm	Lane0
		1284.5	1291	1297.5	nm	Lane1
		1304.5	1311	1317.5	nm	Lane2
		1324.5	1331	1337.5	nm	Lane3
Optical Input Power, each lane	Pin	-13.7	-	2.3	dBm	4.4.1
Damage Threshold	Pmax	-	-	3.3	dBm	
Receiver Sensitivity (OMA), each Lane	Rxsen			-11.5	dBm	
Differential Data Output Swing	V_{OUTPP}	350		800	mV	

Note4.4.1: Measured with 10.3125Gbps, BER=$1x10^{-12}$

Digital Diagnostic Monitoring Characteristics

Parameter	Symbol	Range	Accuracy
Transceiver Case Temperature	T	Measured transceiver case temperature over specified operating range	±3°C
Supply Voltage	Vcc	Internally measured transceiver supply voltage ,3.0~3.6V	±3%
TX Bias Current	Id	Measured TX Bias current in uA	±10%
TX Output Power	Po	Measured TX Output Power in dBm Over the specified output power range	±3dB
Received Optical Power	Pi	Measured RX Received Power in dBm Over the specified input power range	±3dB

5 EEPROM Section

Compatible with SFF-8436 (QSFP+).

6 Pin Definitions

Pin Diagram

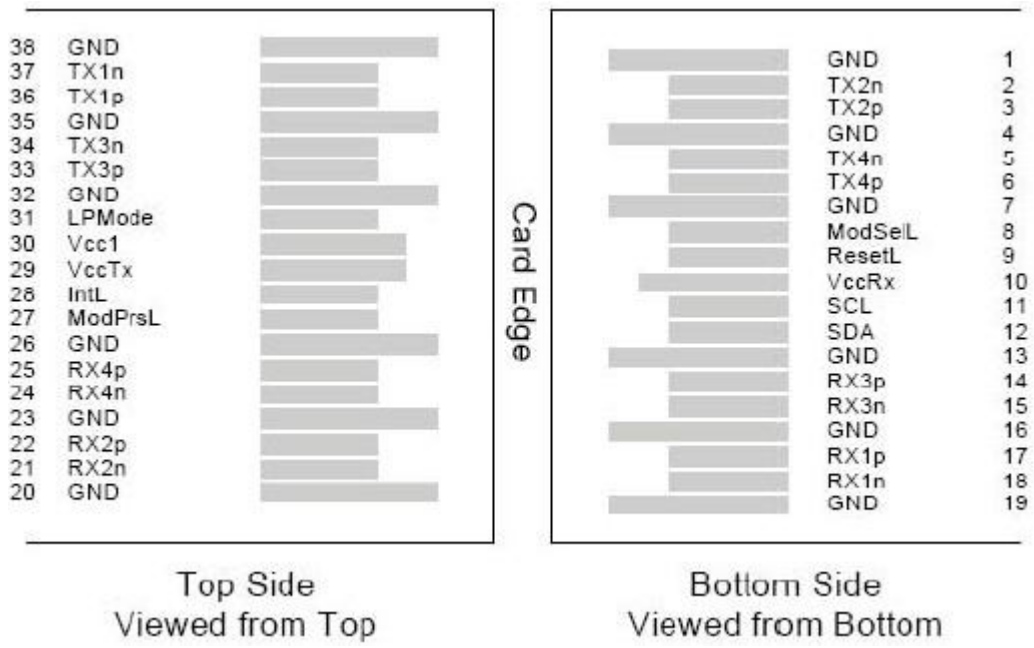

Pin Descriptions

Pin#	Logic	Name	Function	Notes
1		GND	Ground	
2	CML-I	Tx2n	Transmitter Inverted Data Input	
3	CML-I	Tx2p	Transmitter Non-Inverted Data output	
4		GND	Ground	
5	CML-I	Tx4n	Transmitter Inverted Data Input	
6	CML-I	Tx4p	Transmitter Non-Inverted Data output	
7		GND	Ground	
8	LVTLL-I	ModSelL	Module Select	
9	LVTLL-I	ResetL	Module Reset	
10		VccRx	+3.3V Power Supply Receiver	

Pin#	Logic	Name	Function	Notes
11		SCL	2-Wire Serial Interface Clock	
12		SDA	2-Wire Serial Interface Data	
13		GND	Ground	
14	CML-O	Rx3p	Receiver Non-Inverted Data Output	
15	CML-O	Rx3n	Receiver Inverted Data Output	
16		GND	Ground	
17	CML-O	Rx1p	Receiver Non-Inverted Data Output	
18	CML-O	Rx1n	Receiver Inverted Data Output	
19		GND	Ground	
20		GND	Ground	
21	CML-O	Rx2n	Receiver Inverted Data Output	
22	CML-O	Rx2p	Receiver Non-Inverted Data Output	
23		GND	Ground	
24	CML-O	Rx4n	Receiver Inverted Data Output	
25	CML-O	Rx4p	Receiver Non-Inverted Data Output	
26		GND	Ground	
27	LVTTL-O	ModPrsL	Module Present	
28	LVTTL-O	IntL	Interrupt	
29		VccTx	+3.3 V Power Supply transmitter	
30		Vcc1	+3.3 V Power Supply	

Pin#	Logic	Name	Function	Notes
31	LVTTL-I	LPMode	Low Power Mode	
32		GND	Ground	
33	CML-I	Tx3p	Transmitter Non-Inverted Data Input	
34	CML-I	Tx3n	Transmitter Inverted Data Output	
35		GND	Ground	
36	CML-I	Tx1p	Transmitter Non-Inverted Data Input	
37	CML-I	Tx1n	Transmitter Inverted Data Output	
38		GND	Ground	

7 Outline Dimensions

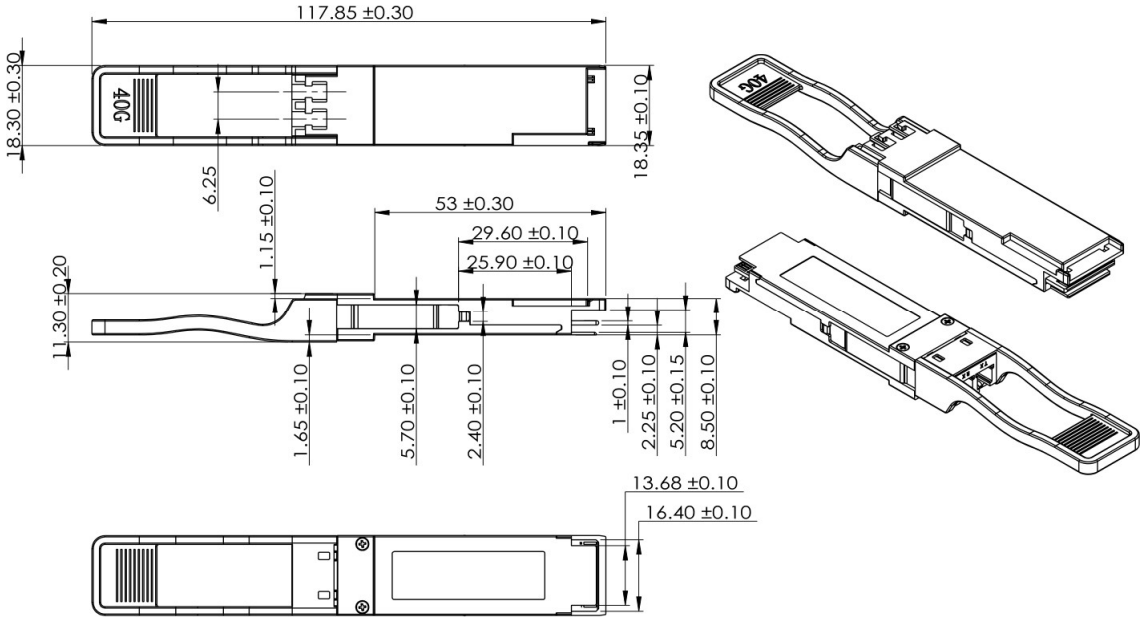

8 Ordering Information

Part Number	Operating Case Temperature	RoHS Compliant
HD-QSFP+/40G-LR4	0 ~ 70 °C	RoHS-6
HD-QSFP+/40G-LR4-I	-40 ~ 85 °C	RoHS-6

9 Document History

Version	Change Description	Changed by	Date
VER A	Initial Release	Wang Xin	01/15/2021